NOTES:

1. TEXT

REVISION HISTORY			
REV	DESCRIPTION	DATE	REV BY
1	INITIAL RELEASE		

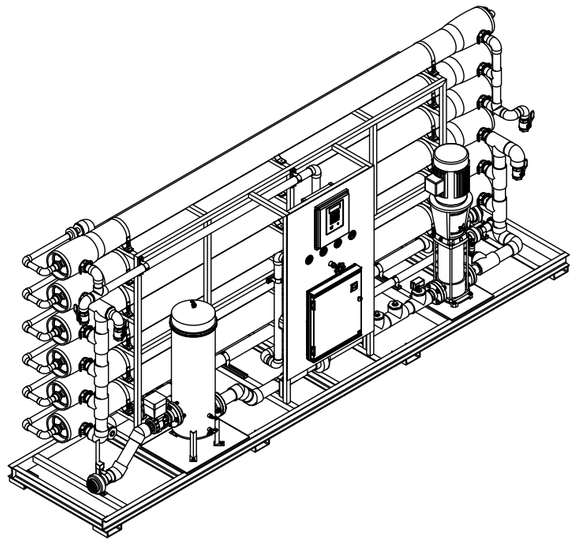

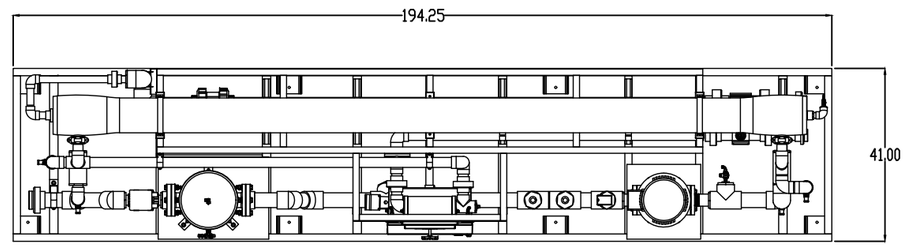

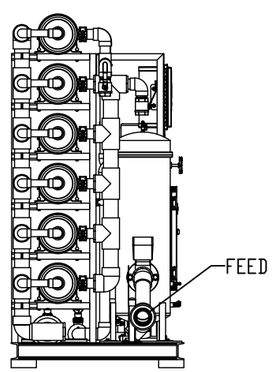

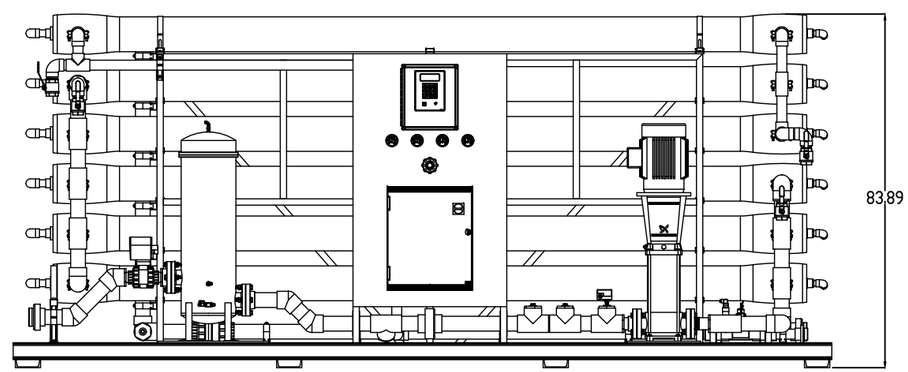

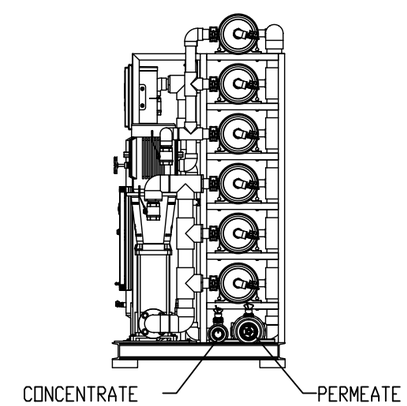

CRITICAL DIMENSIONS			
MEASUREMENT	SHEET	DESCRIPTION	TOLERANCE
M2			+/- 1 TURN
M1			PASS/FAIL

UNLESS OTHERWISE SPECIFIED
1. DIMENSIONS ARE IN INCHES
2. INTERPRET DIM. & TOL. PER ASME Y14.5M - 1994
3. ALL SHEETS ARE SAME REVISION
4. DO NOT SCALE DRAWING
5. BREAK ALL SHARP EDGES AS REQ'D

TOLERANCES ARE:

DECIMAL	ANGLES MACH	ANGLES FORMED
.X ± 0.1	±0° 30'	±2°
.XX ± 0.03		
.XXX ± 0.010		

COMMON AXIS 0.015 TIR

SURFACE FINISH 125 µIN RMS

APPROVALS (CURRENT REVISION)		EDP NO. 68111230
PREPARED	DATE	LEGACY NO.
CHECK	DATE	FORMAT INVENTOR
MATERIAL		
OTHER		

WATTS®

THIS DRAWING DISCLOSES CONFIDENTIAL AND PROPRIETARY DATA OWNED BY WATTS WATER TECHNOLOGIES, INC. AND MAY NOT BE USED OR DISCLOSED TO OTHERS WITHOUT THE PRIOR WRITTEN CONSENT OF WATTS WATER TECHNOLOGIES, INC.

TITLE: HC-8040-06-4

SIZE B | DWG NO. 68111230 | REV 1

SCALE: NTS | SHEET 1 OF 1